RevNo	Revision note	Date	Signature	Checked

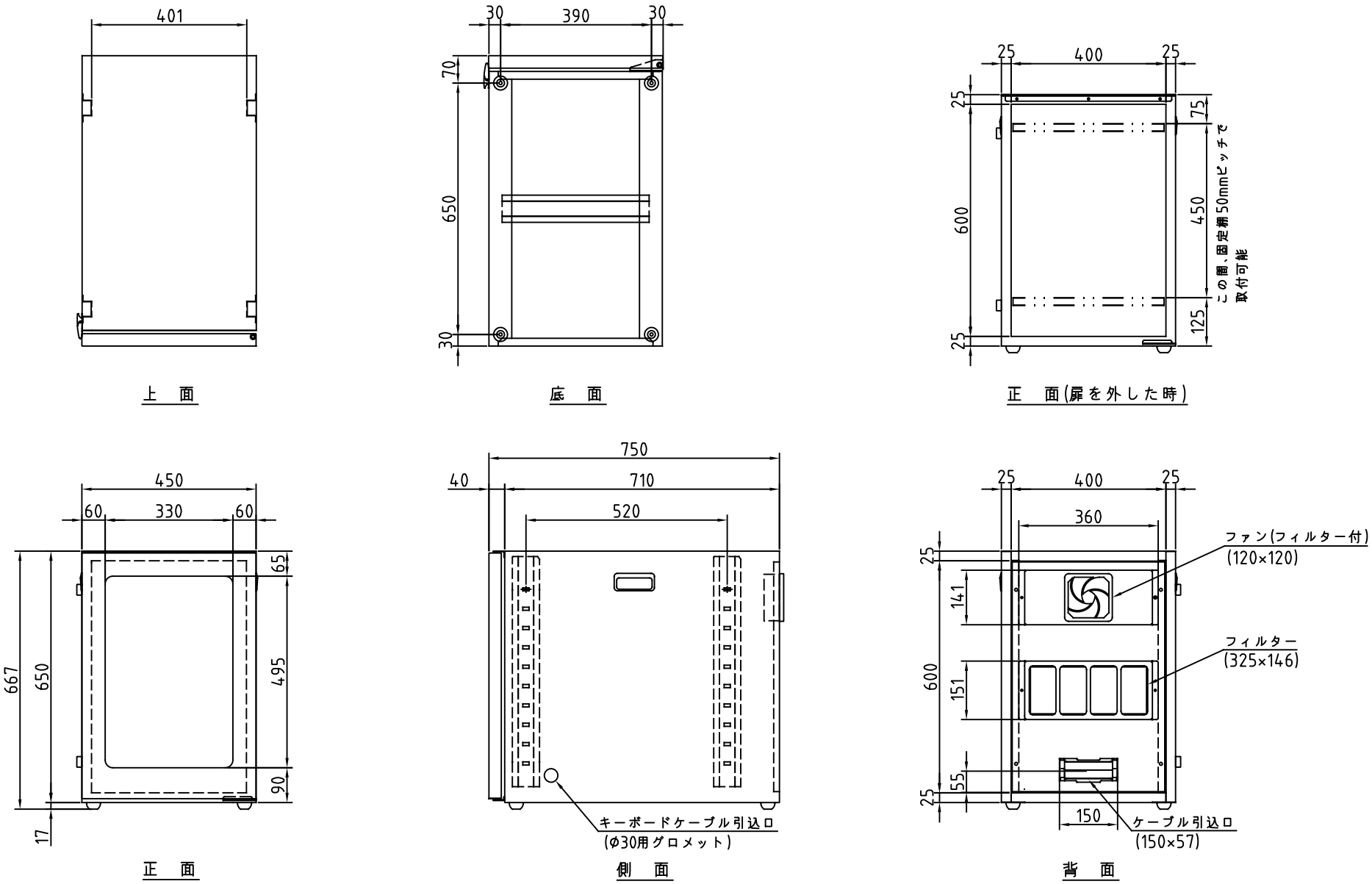

材質　SPCC　t1.0
表面処理　7.5Y6/0.5ﾚｻﾞｰﾄﾝ
数量（／台）

Itemref	Quantity	Title/Name, designation, material, dimension etc		Article No./Reference	
Designed by n_tanba	Checked by	Approved by - date	Filename	Date 10/12/08	Scale 1:10

エス・ディ・エス株式会社

L48F467 外観図(G仕様共通)

L48F467　Edition　Sheet 1/1